Queen Mary
University of London
Science and Engineering

EBU4202: Digital Circuit Design
Hazards and Glitches

Dr. Md Hasanuzzaman Sagor (Hasan)
Dr. Chao Shu (Chao)
Dr. Farha Lakhani (Farha)

内容少 但很重要

School of Electronic Engineering and Computer Science,
Queen Mary University of London,
London, United Kingdom.

Timing Hazards and Output Glitches

片刻的

- *Output glitch*: A momentary unexpected output change (short pulse) when an input changes; usually caused by gate propagation delays.

- *Hazards*: A timing hazard exists in a combinational circuit when it produces an *output glitch* when one or more inputs change.
  - Static Hazards (*static-1* and *static-0*): when 1 input variable changes, the output changes momentarily before stabilising on the correct value.

    出现小波glitch.

    - Can usually be fixed by adding redundant logic
  - Dynamic Hazards: possibility of an output changing more than once as a result of a single input change.

Timing Hazards and Output Glitches

- Example of *static-1 hazard*

K map 的性质
相邻的只变1个
variable.

A \ BC	00	01	11	10
0	0	0	1	0
1	1	1	1	0

2个EPI

1-hazard

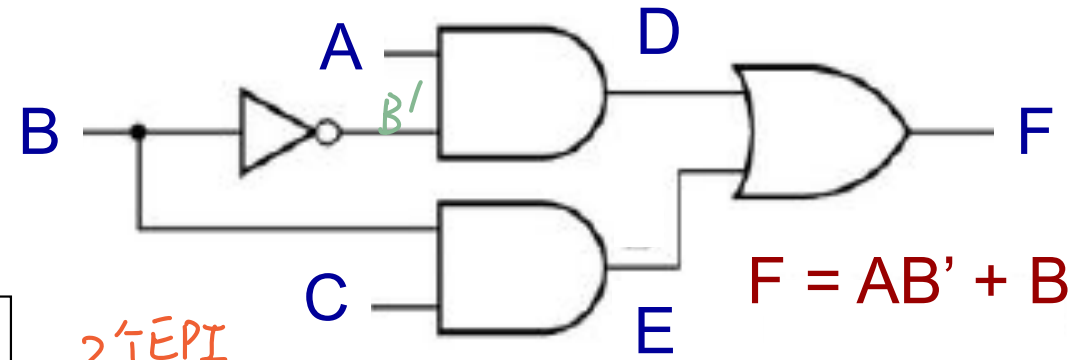

F = AB' + BC

B由0到1 A和C都是1不变 结果都是1不变

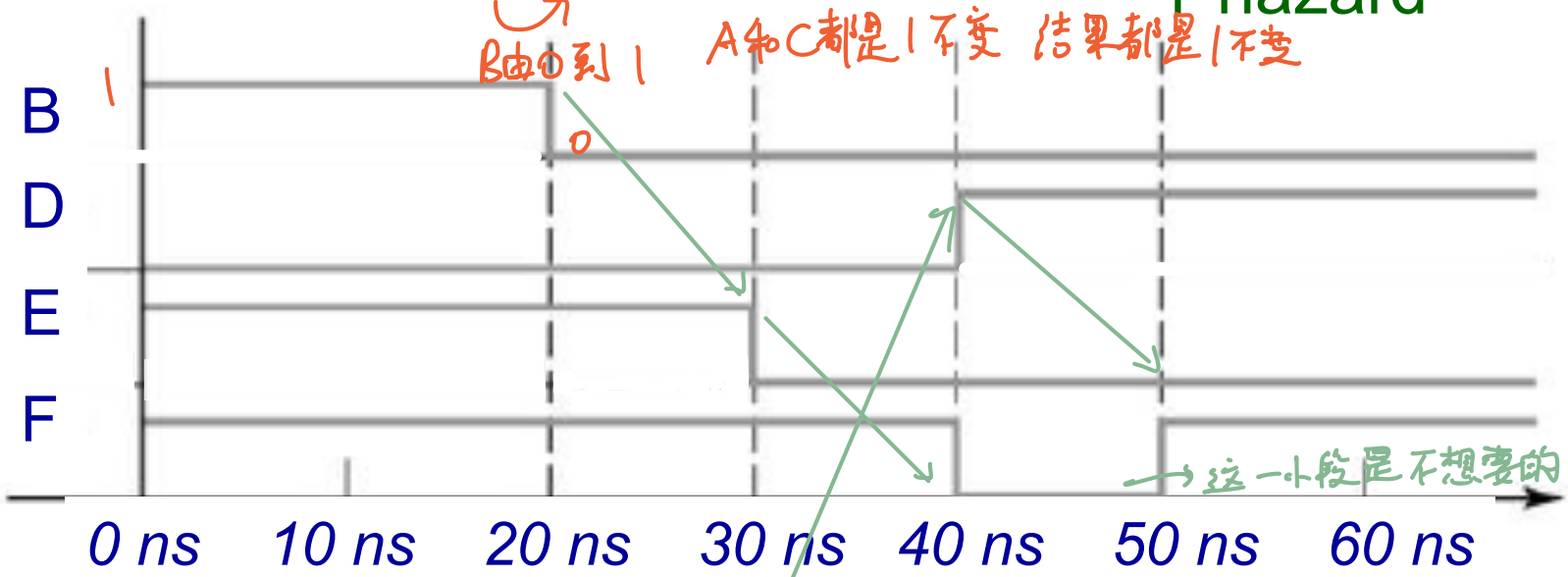

这一小段是不想要的

B 0 1

过一会儿后D受影响

Timing Hazards and Output Glitches

- Example of *static-1 hazard (cont.)*:

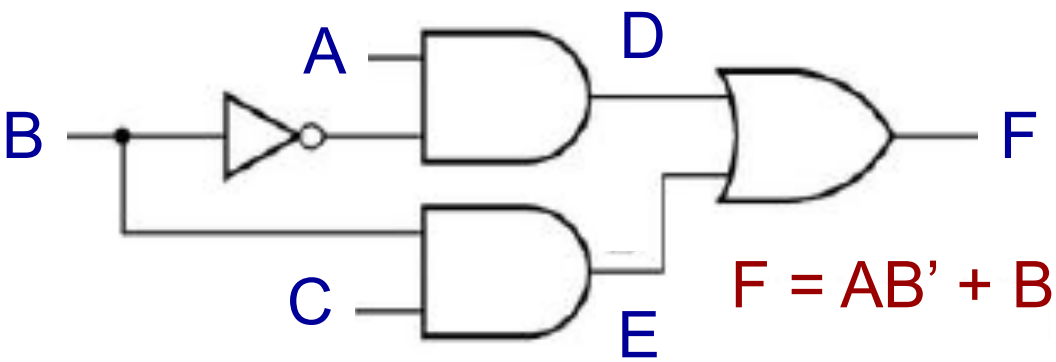

F = AB' + BC

A \ BC	00	01	11	10
0	0	0	1	0
1	1	1	1	0

把所有PI都搞进来就解决了.

removing the *static-1 hazard*

F = AB' + BC + AC

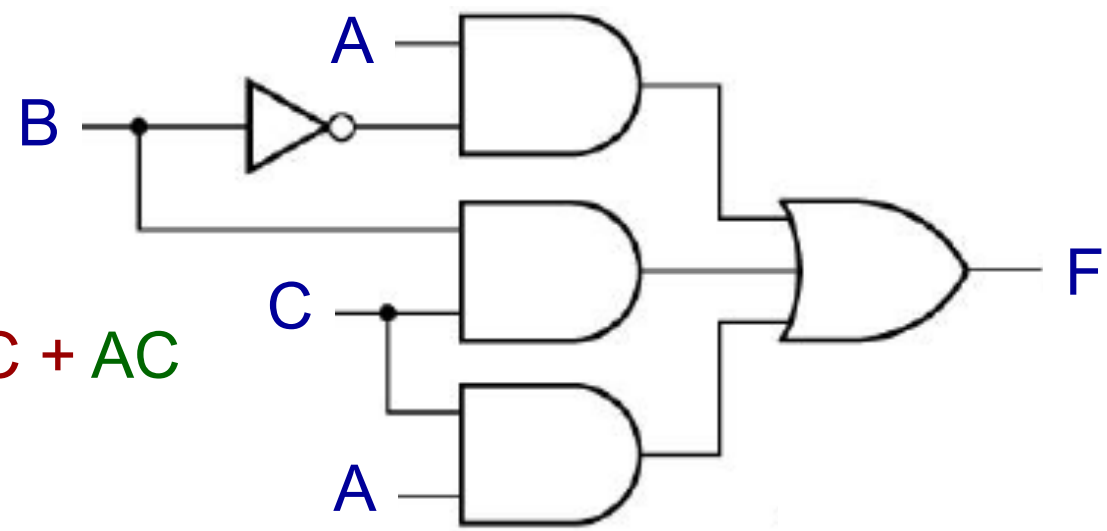

Static Hazards 判定方法

- A **static-1 hazard** is a pair of input combinations that: (i) differ in only one input variable and (ii) both give a 1 output; such that it is possible for a momentary 0 output to occur during a transition in the differing input variable.

① 只变1个 variable
② 结果一样
⇒ K map 中的 PI 相邻了.

- A **static-0 hazard** is a pair of input combinations that: (i) differ in only one input variable and (ii) both give a 0 output; such that it is possible for a momentary 1 output to occur during a transition in the differing input variable.

Timing Hazards

Question: Is there any static hazard on the combinational circuit shown in the Karnaugh Maps? How can we eliminate this?

A \ BC	00	01	11	10
0	0	0	1	1
1	0	1	1	0

相邻了

Timing Hazards

$F = A' . B + A . C$

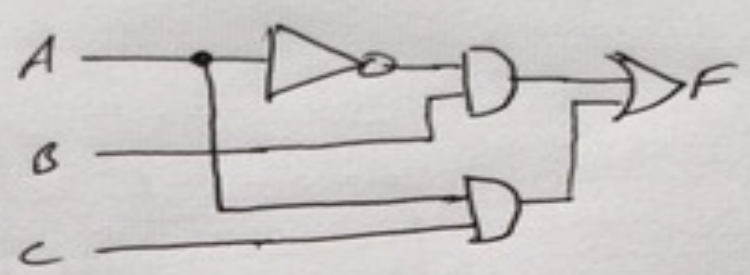

A \ BC	00	01	11	10
0	0	0	1	1
1	0	1	1	0

F

STATIC – 1 HAZARD ('RACE' HAZARD)

IF ONE OF THE AND GATE OUTPUTS GOES TO 0 BEFORE THE OTHER.

Timing Hazards

Is there any static hazard on the combinational circuit shown in the Karnaugh Maps? How can we eliminate this?

Answer: add a redundant group:

A \ BC	00	01	11	10
0	0	0	1	1
1	0	1	1	0

如果圈0 → 此图是出现

STATIC 0

Timing Hazards

$$F = A'.B + A.C + B.C$$

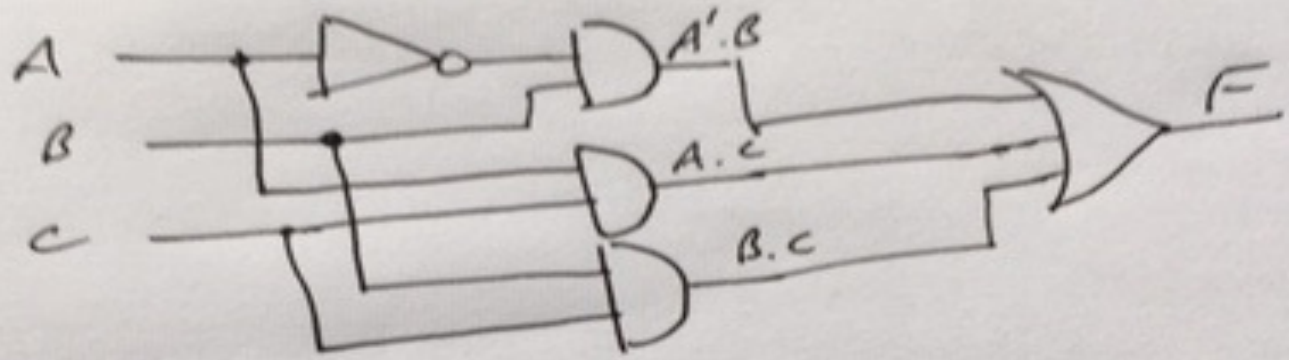

STATIC - 1 HAZARD ELIMINATED

A \ BC	00	01	11	10
0	0	0	1	1
1	0	1	1	0

F

最后结果是1

→ STATIC 1

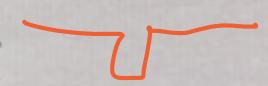

STATIC 0

Timing Hazards

Example: $F = X'Y'Z + X'YZ' + XYZ = (X \oplus Y)'.Z + (X + Z)'.Y$

Three input combinations give output 1.

XYZ = 001

XYZ = 010

XYZ = 111

通常圈0时，正常圈的话没事

但有人故意圈的不好(如图)

↓

STATIC 0 hazard

X \ YZ	00	01	11	10
0	0	1	0	1
1	0	0	1	0

no static 1 hazard

If we investigate any two input combinations, we see that there are two variable changes. So, no Static-1 Hazard.

But according to the static-0 definition, there is a possibility to exist a Static-0 hazard (for input combinations XYZ = 000, 100). However, a properly designed two-level SoPs (AND-OR) circuit has no Static-0 hazard. You can draw the corresponding timing diagram for both circuits and check if there is any hazard.
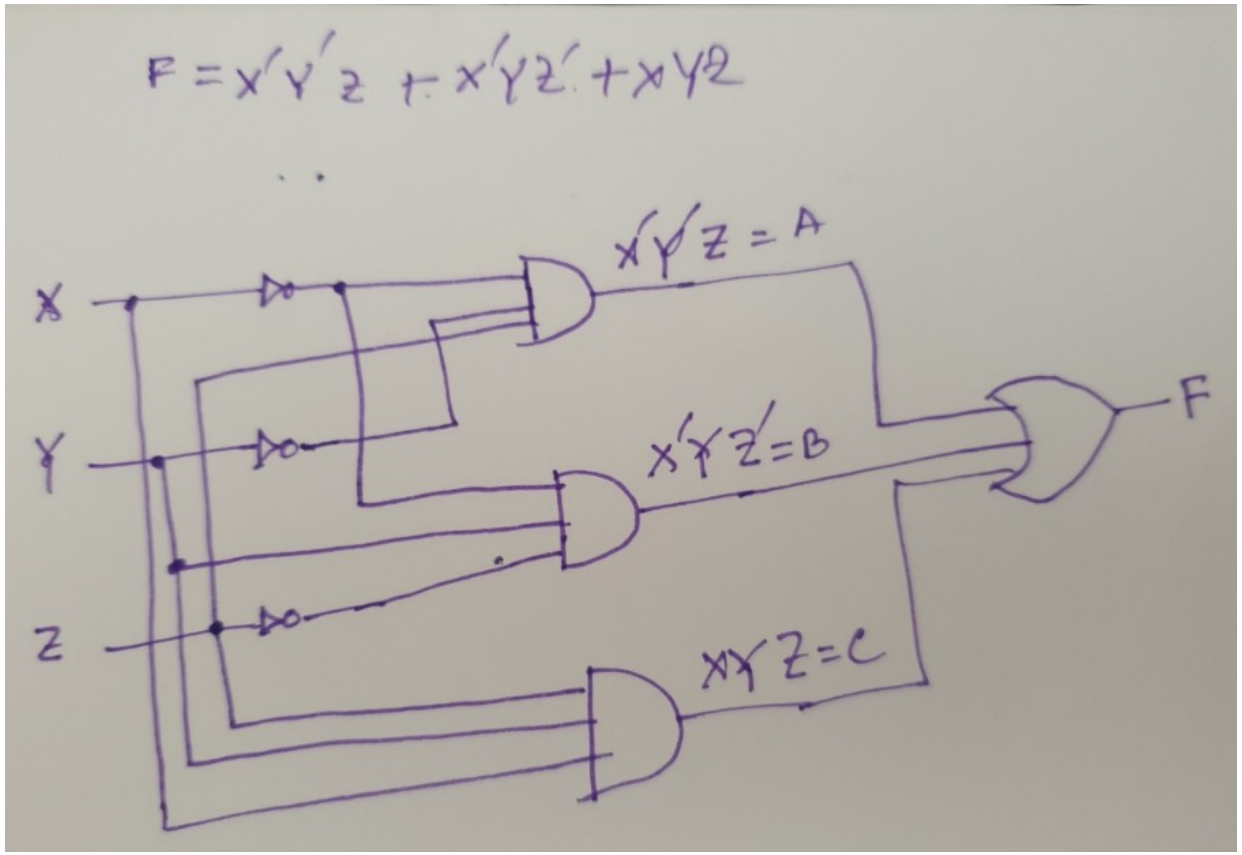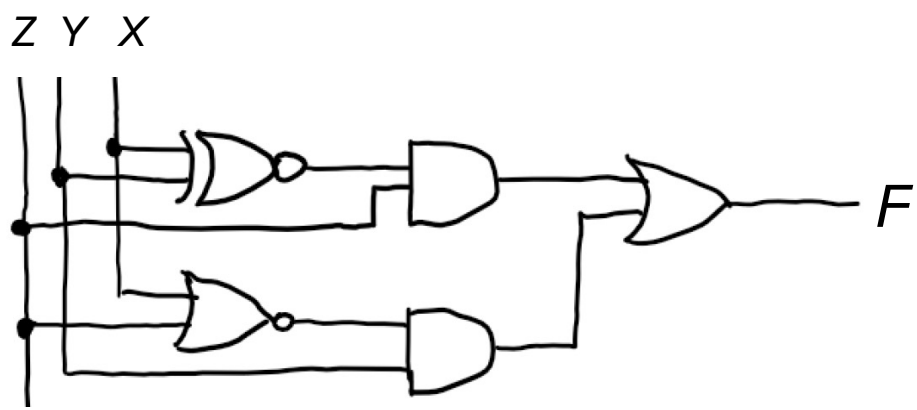
Timing Hazards